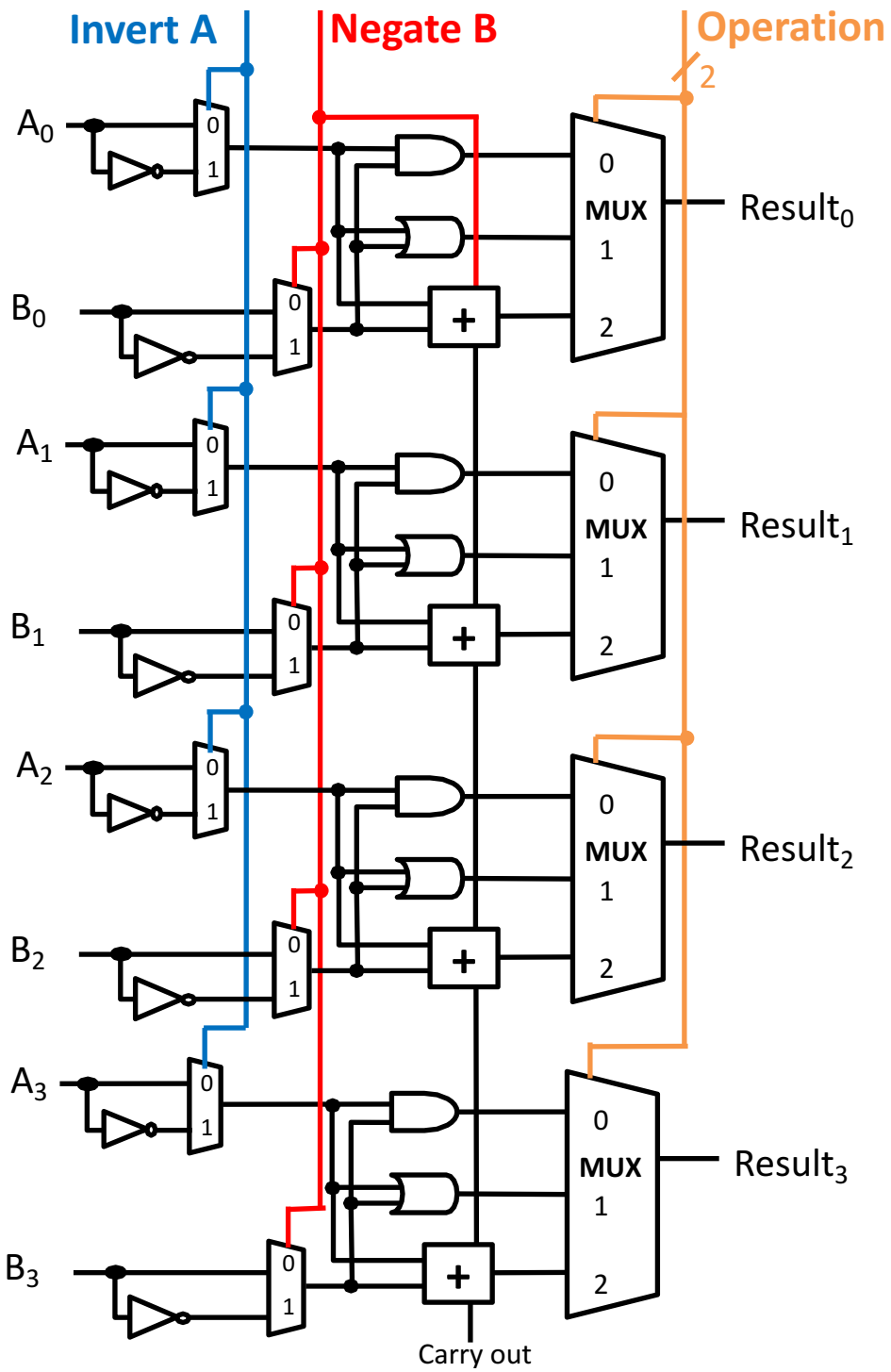
Invert A
Negate B
Operation
2
A0
B0
A1
B1
A2
B2
A3
B3
0
1
MUX
2
+
Result0
Result1
Result2
Result3
Carry out

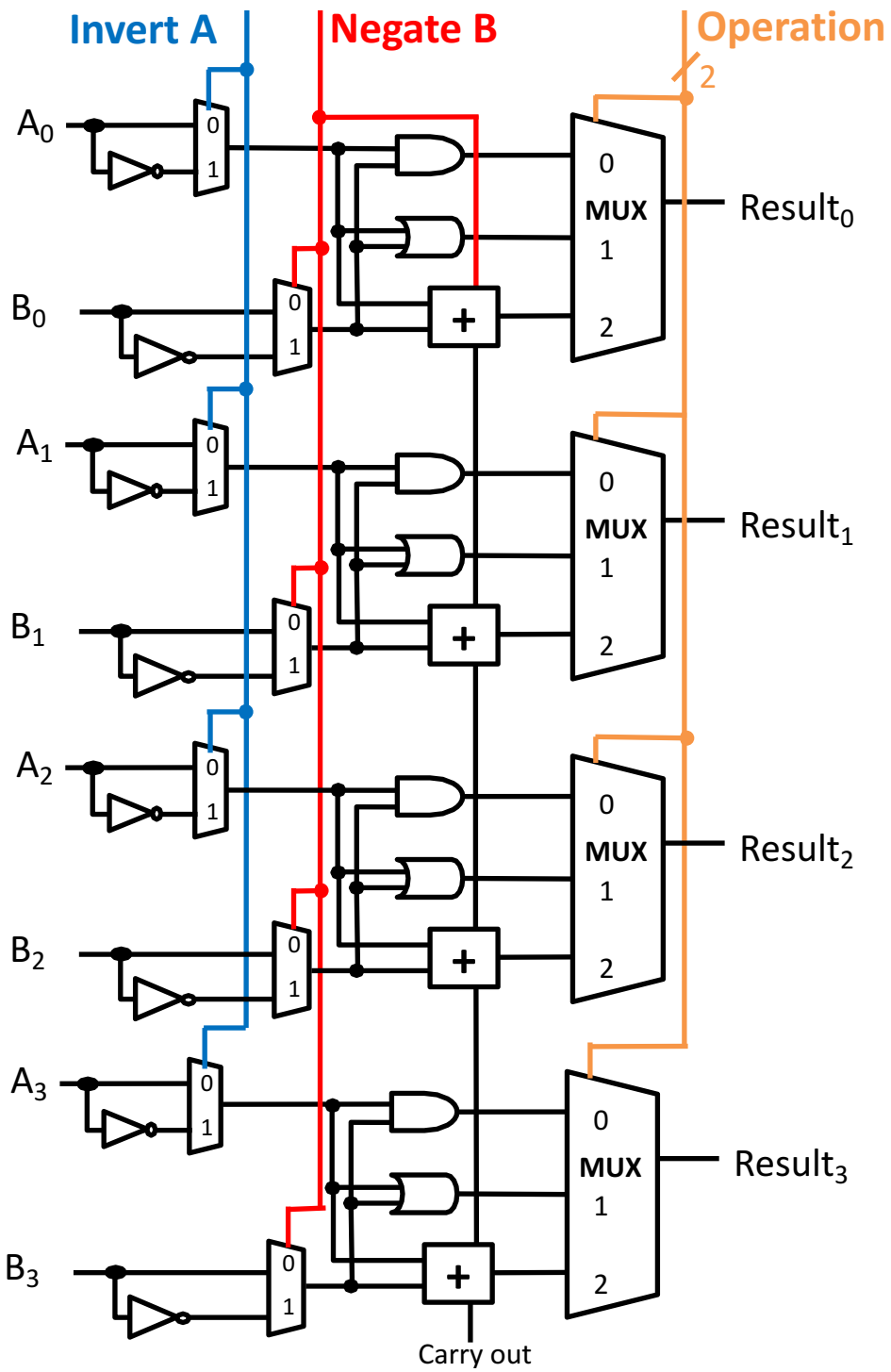
Invert A
Negate B
Operation
2
A0
B0
A1
B1
A2
B2
A3
B3
0
1
MUX
2
+
Result0
Result1
Result2
Result3
Carry out

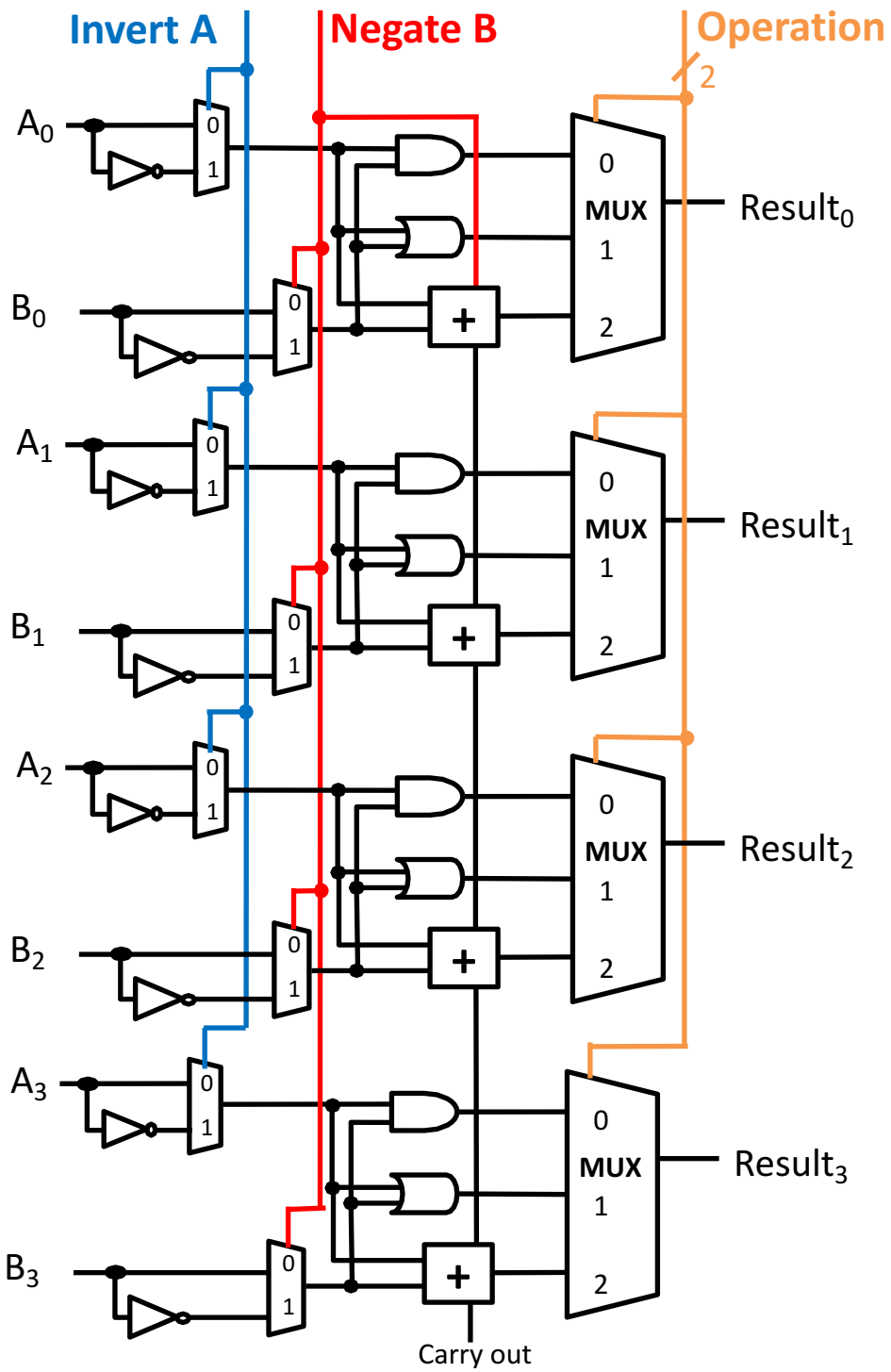
Invert A
Negate B
Operation
2
A0
B0
A1
B1
A2
B2
A3
B3
0
1
MUX
2
+
Result0
Result1
Result2
Result3
Carry out

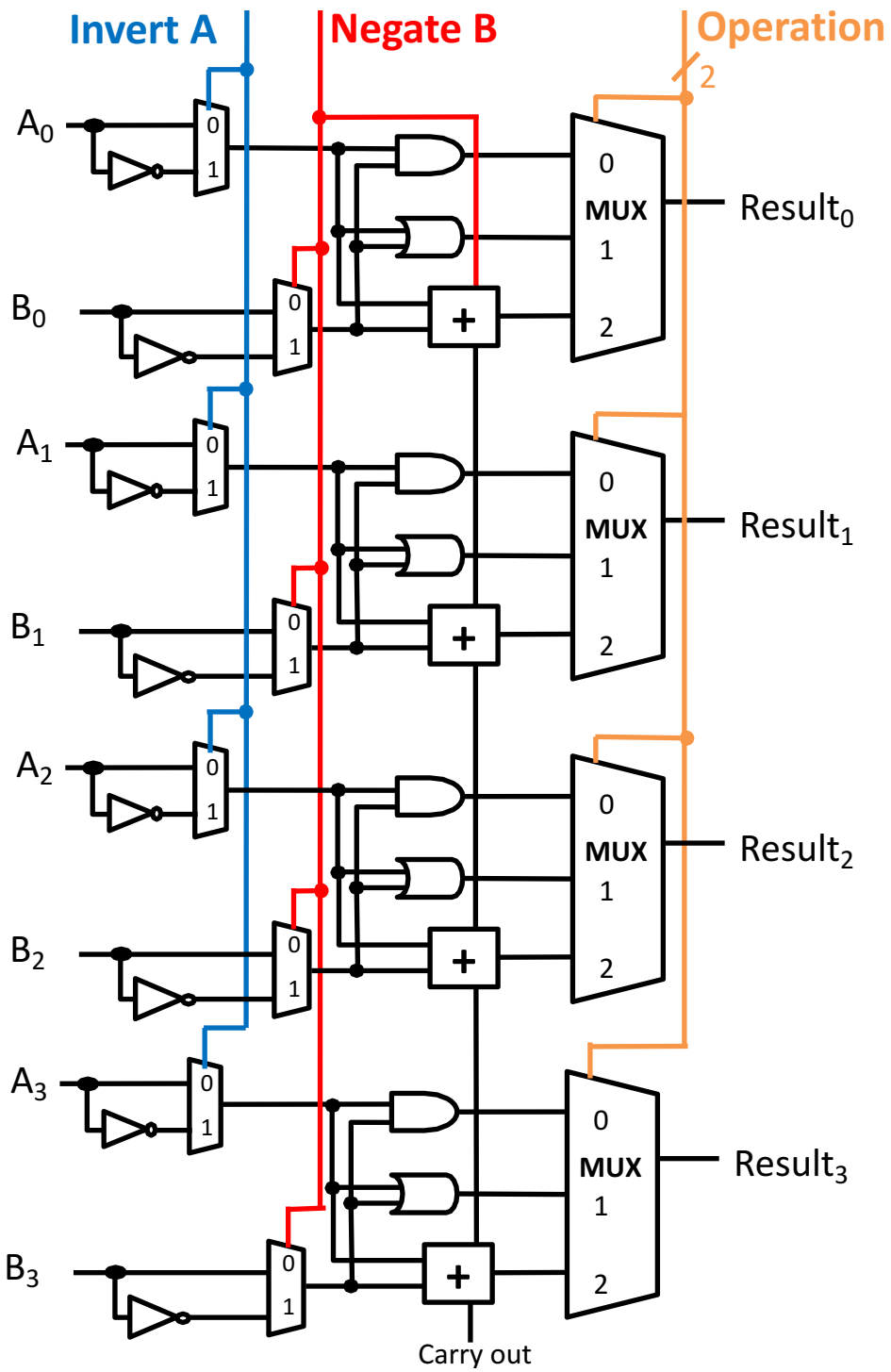
Invert A
Negate B
Operation
2
A0
B0
A1
B1
A2
B2
A3
B3
0
1
MUX
2
+
Result0
Result1
Result2
Result3
Carry out